Wheelie bins / waste containers MGB 660 L

by Weber

Spare parts / individual parts / accessories

Lid opener

www.w-weber.com

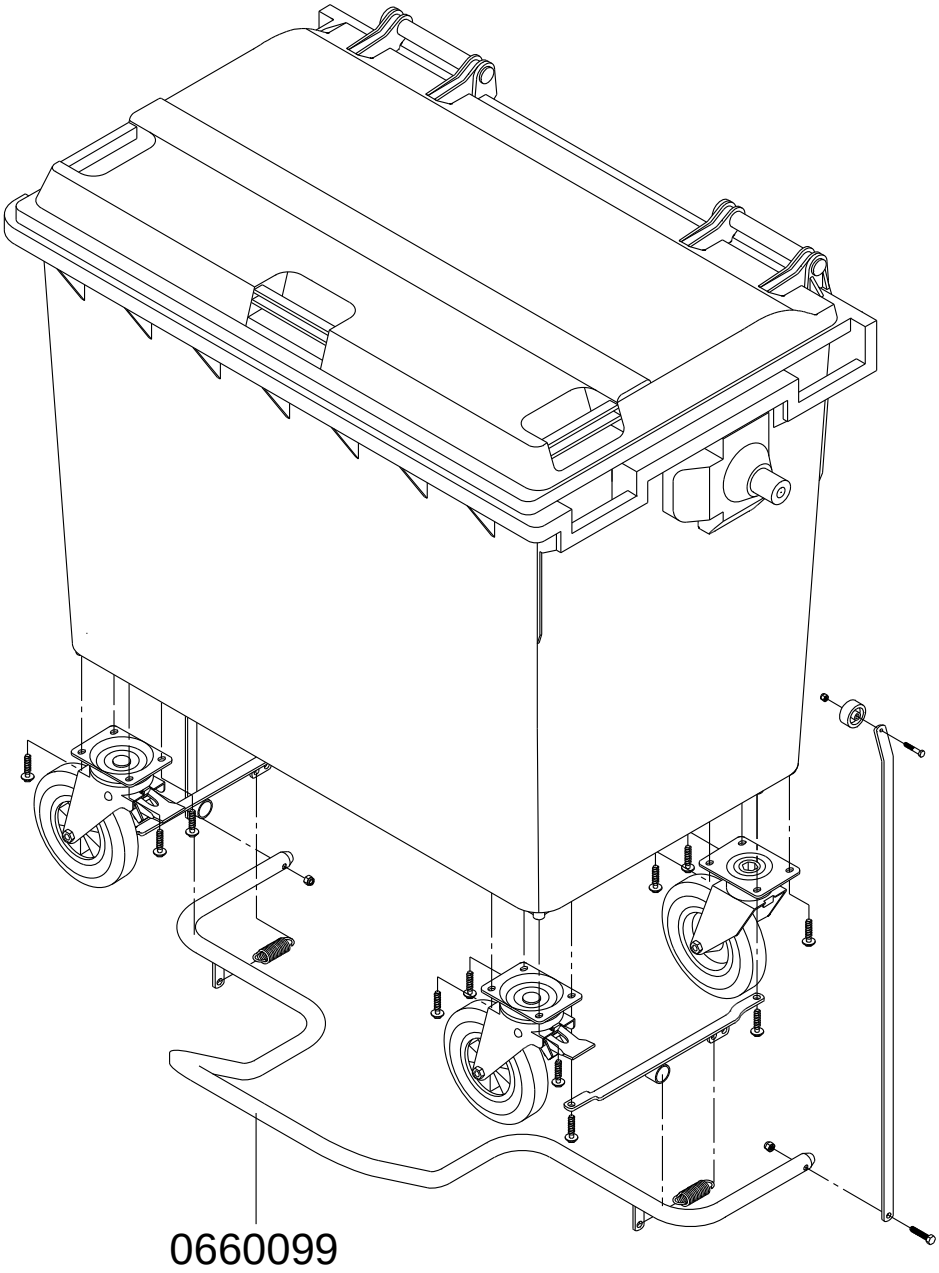

0660099 Lid opener

Lid opener

Spare part / individual part / accessory for MGB 660 L wheelie bins / waste containers by Weber.

Wheelie bins 660 L, lid-in-lid

Wheelie bins / waste containers MGB 660 L / 770 L

by Weber

Spare parts / individual parts / accessories

Left trunnion

www.w-weber.com

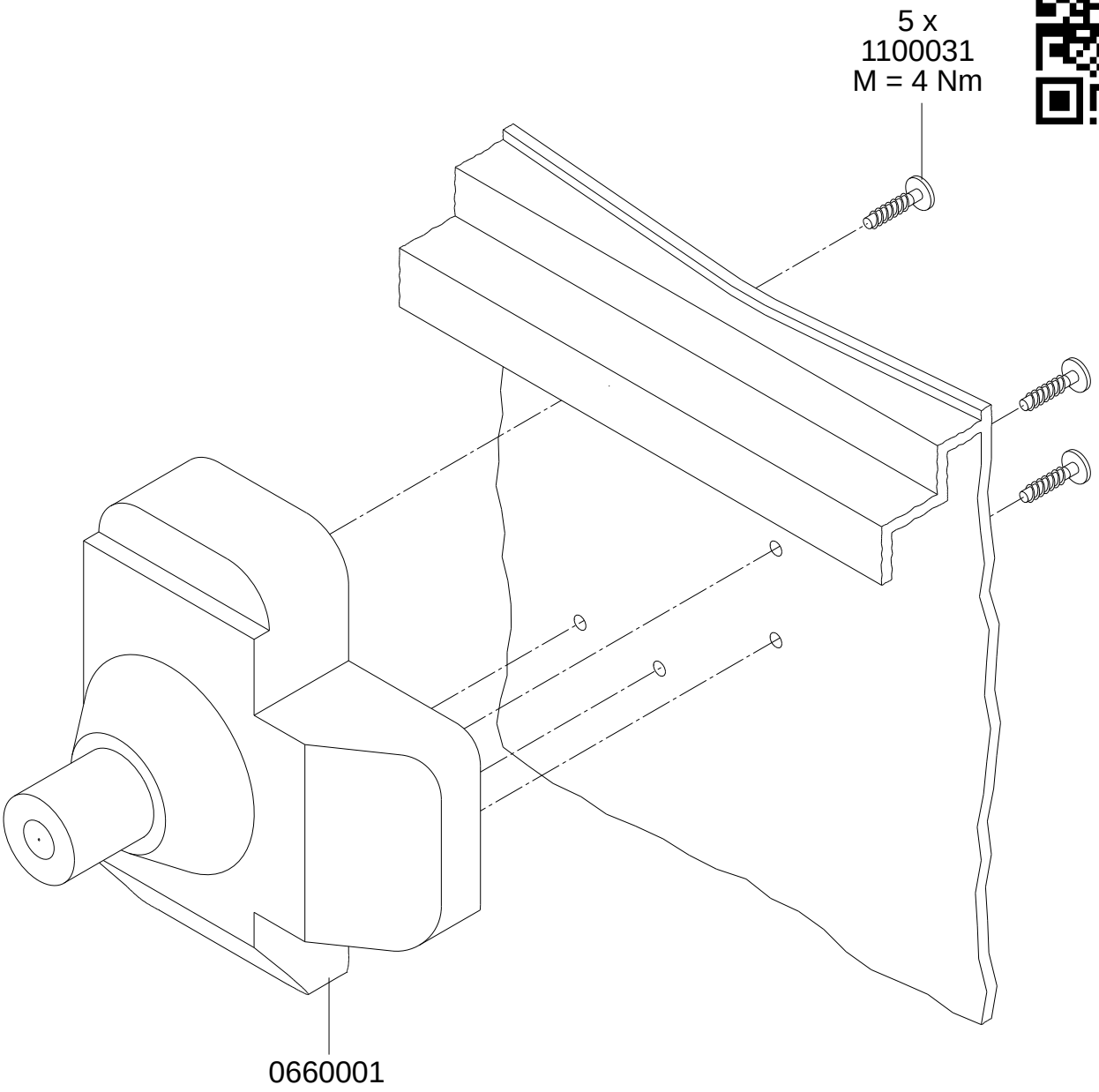

0660001 Left trunnion
1100031

Left trunnion

Spare part / individual part / accessory for MGB 660 L / 770 L wheelie bins / waste containers by Weber.

Wheelie bins 660 L / 770 L, lid-in-lid

Wheelie bins / waste containers MGB 660 L / 770 L

by Weber

Spare parts / individual parts / accessories

Right trunnion

www.w-weber.com

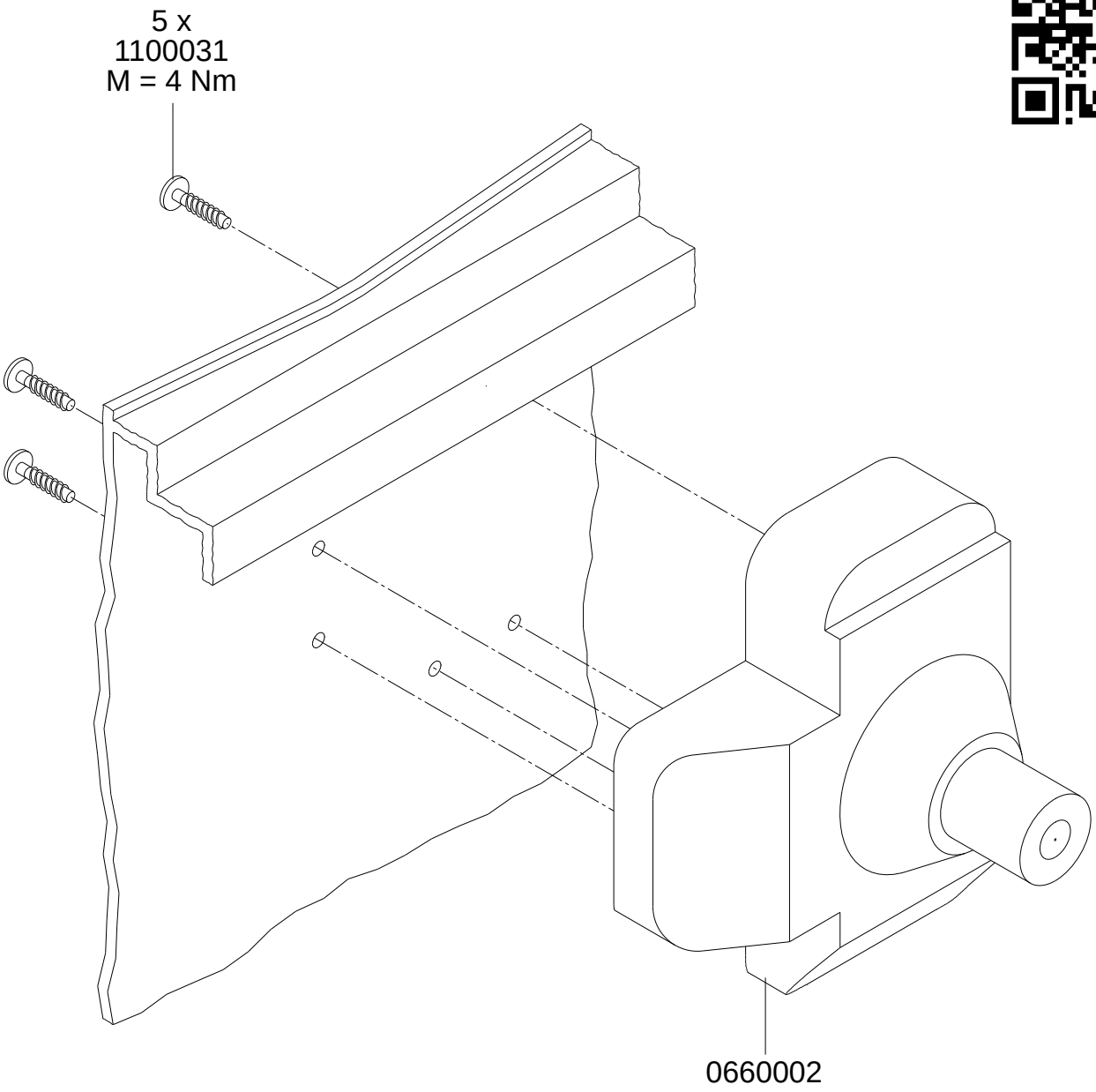

0660002 1100031	Right trunnion

Right trunnion

Spare part / individual part / accessory for MGB 660 L / 770 L wheelie bins / waste containers by Weber.

Wheelie bins 660 L / 770 L, lid-in-lid

Wheelie bins / waste containers MGB 660 L / 770 L

by Weber

Spare parts / individual parts / accessories

Lid bearing

www.w-weber.com

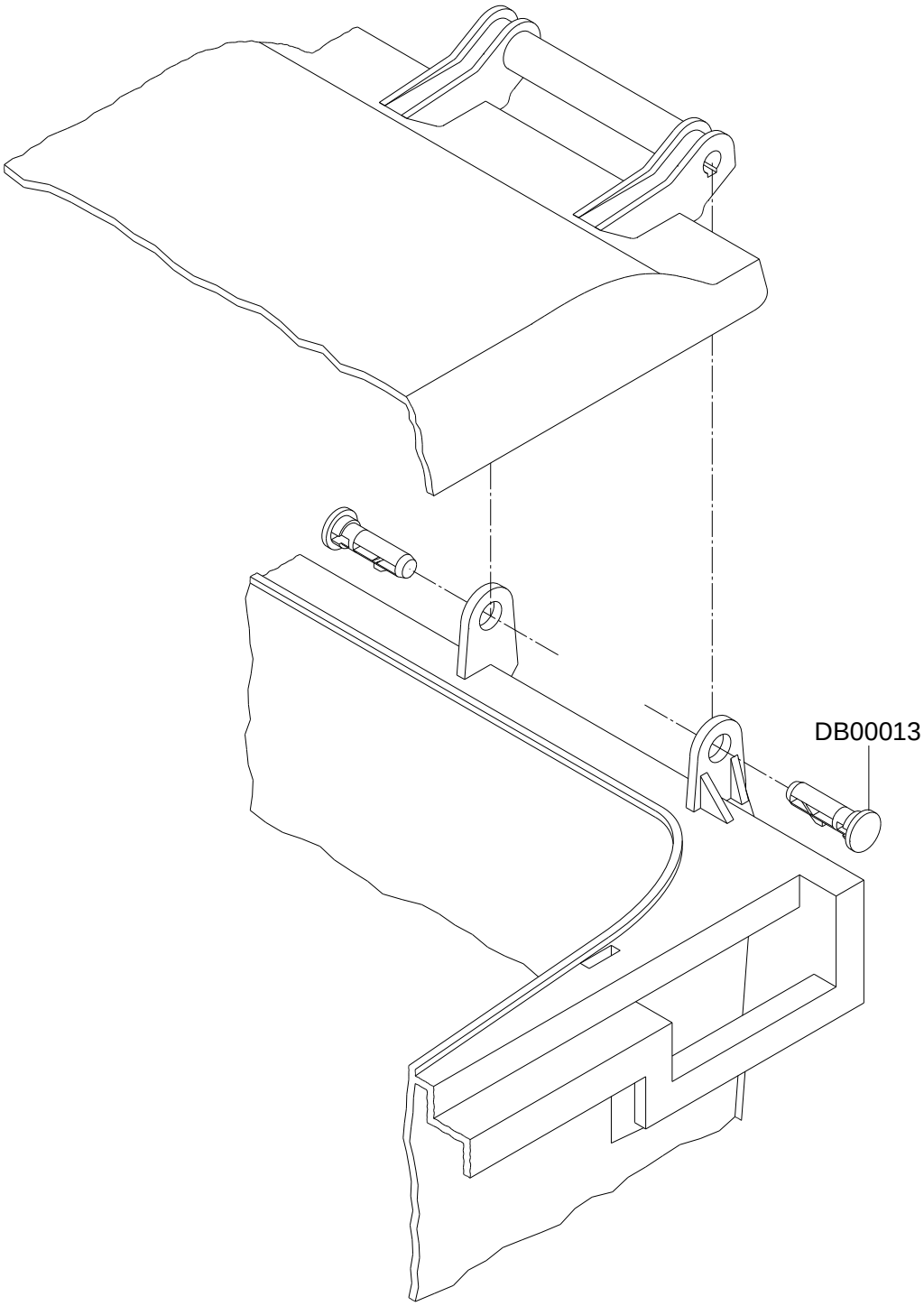

DB00013 Lid pin

Lid bearing

Spare part / individual part / accessory for MGB 660 L / 770 L wheelie bins / waste containers by Weber.

Wheelie bins 660 L / 770 L

Wheelie bins / waste containers MGB 660 L / 770 L

by Weber

Spare parts / individual parts / accessories

Chassis with wheel brake

www.w-weber.com

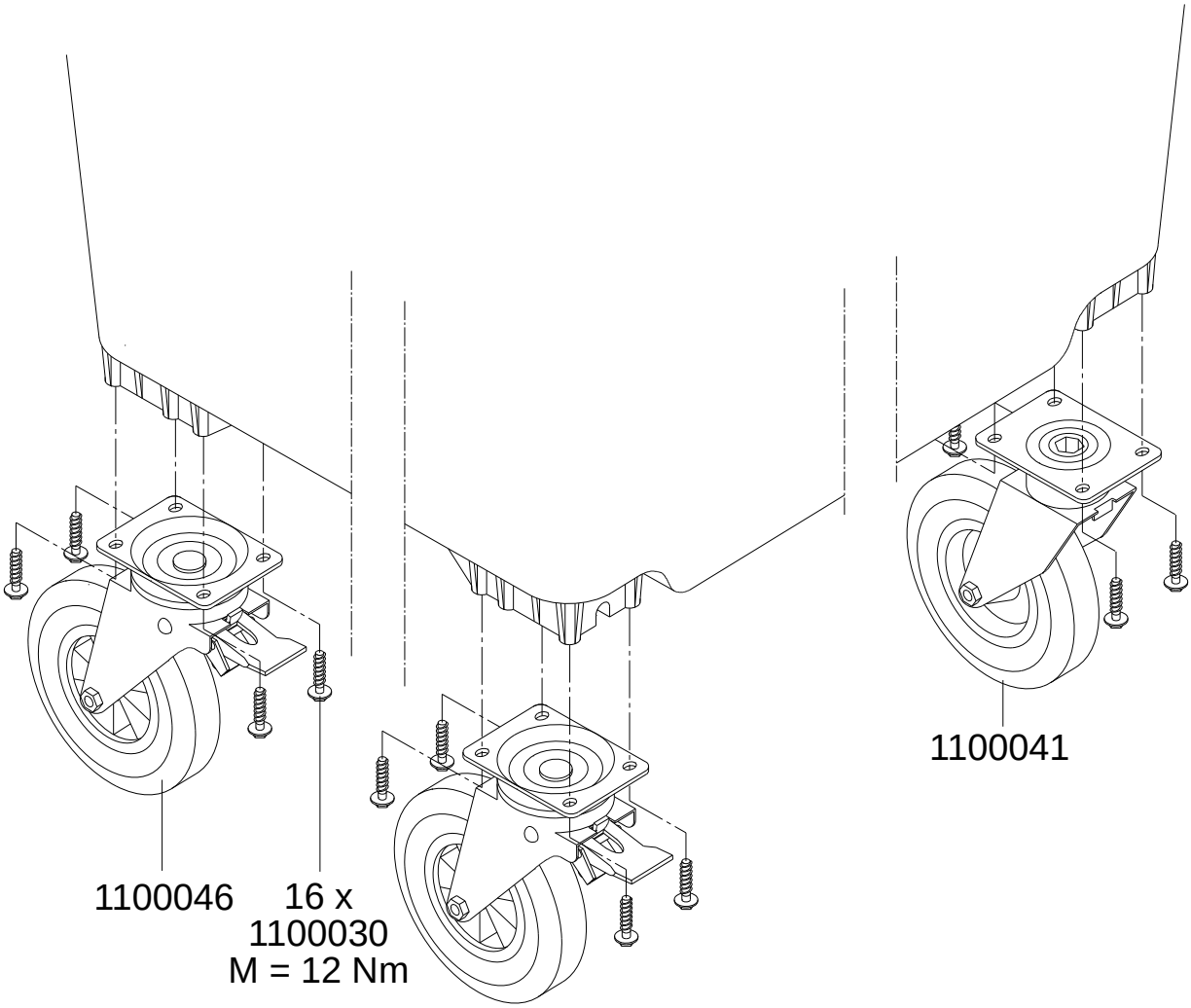

1100030	Screw 10x40
1100041	
1100046	Plastic swivel castor with wheel brake

Chassis with wheel brake

Spare part / individual part / accessory for MGB 660 L / 770 L wheelie bins / waste containers by Weber.

Wheelie bins 660 L / 770 L, lid-in-lid

Wheelie bins / waste containers MGB 660 L / 770 L

by Weber

Spare parts / individual parts / accessories

Chassis with central brake

www.w-weber.com

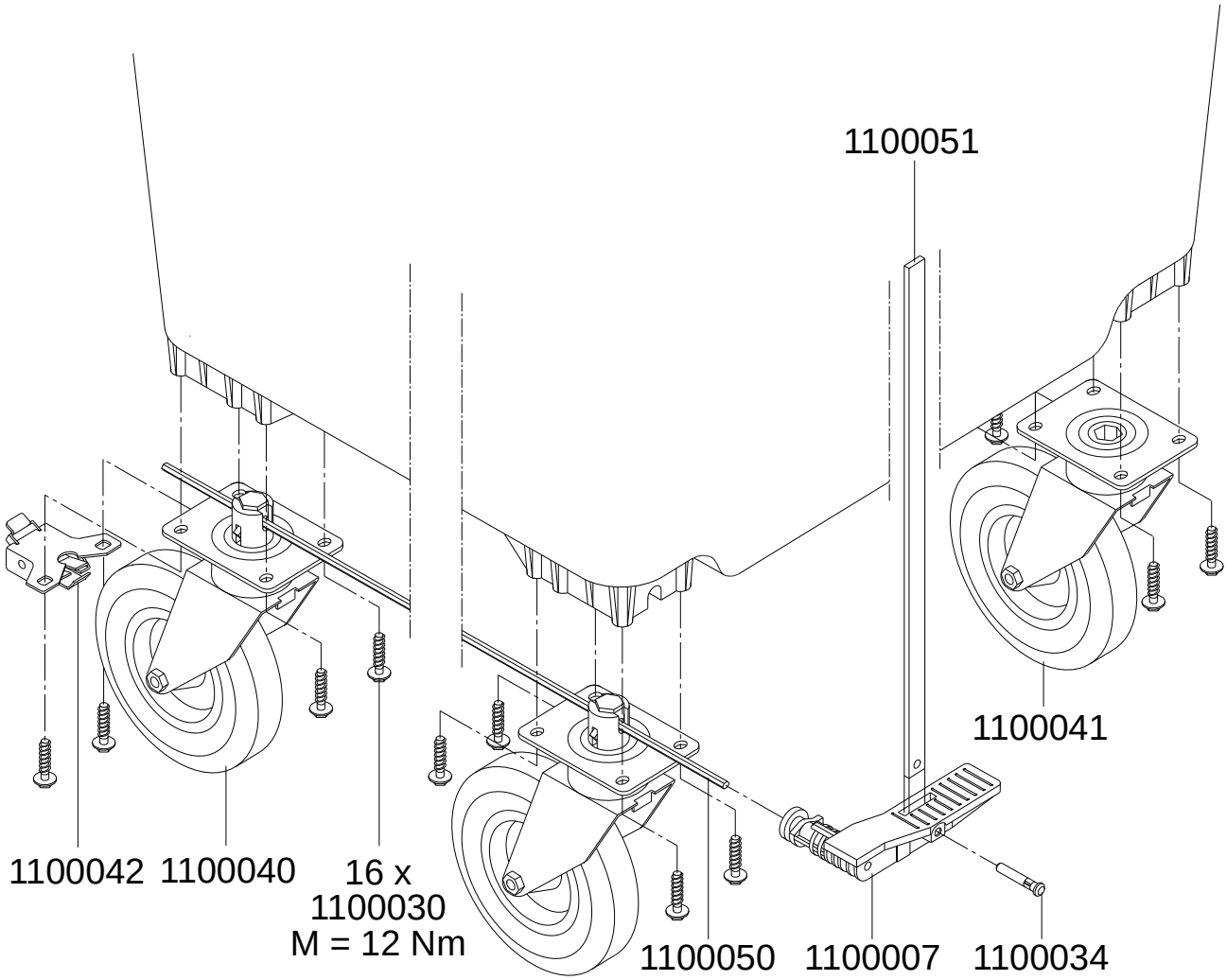

1100007	Foot pedal
1100030	Screw 10x40
1100034	Rivet 50x8
1100040	Plastic swivel castor with central brake
1100041	Plastic swivel castor
1100042	Steering lock for plastic rims
1100050	Brake shaft 1030 mm
1100051	Locking bar

Chassis with central brake

Spare part / individual part / accessory for MGB 660 L / 770 L wheelie bins / waste containers by Weber.

Wheelie bins 660 L / 770 L, lid-in-lid

Wheelie bins / waste containers MGB 660 L / 770 L

by Weber

Spare parts / individual parts / accessories

Lifting handle

www.w-weber.com

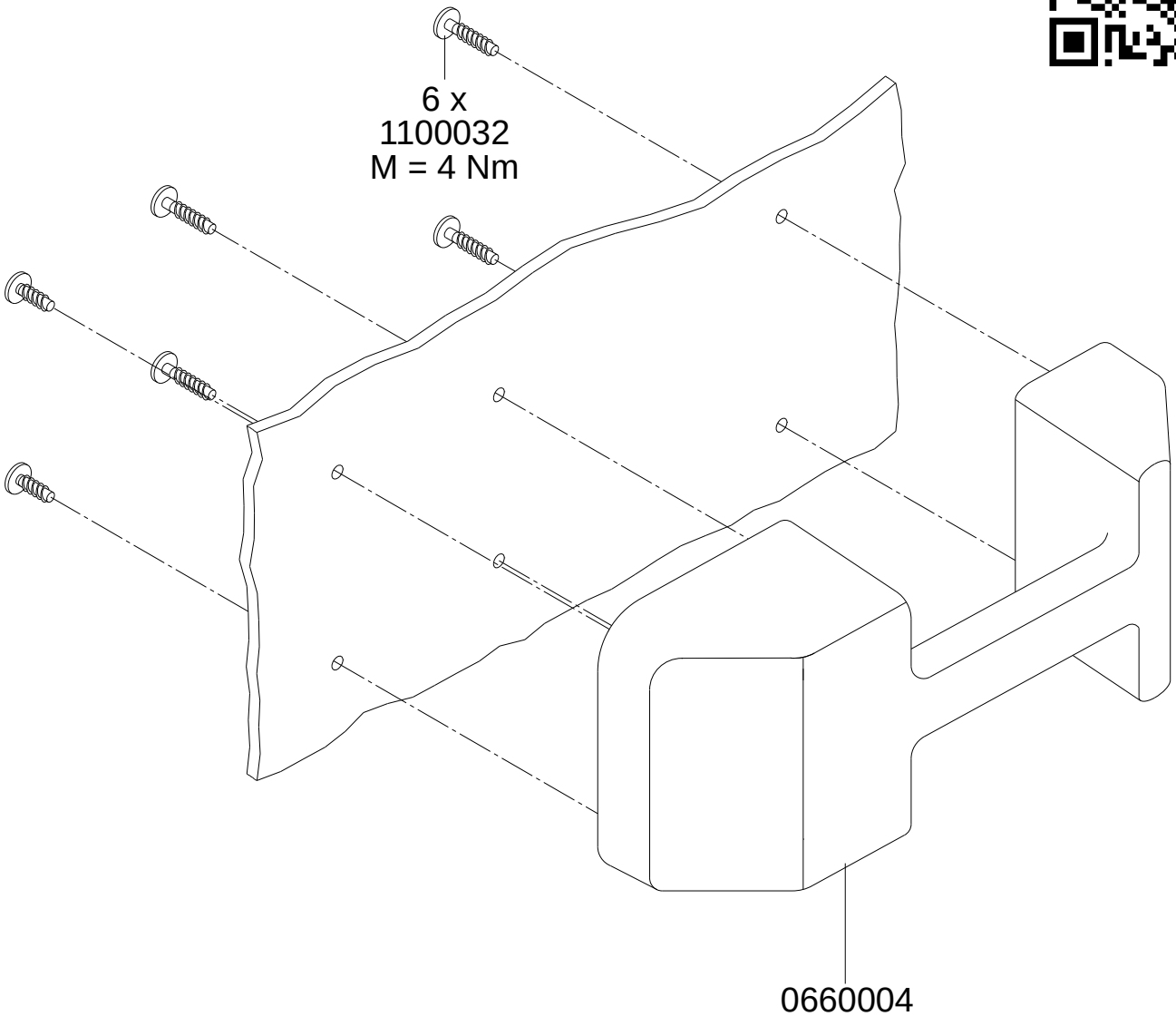

0660004
1100032 Screw 7x20

Lifting handle

Spare part / individual part / accessory for MGB 660 L / 770 L wheelie bins / waste containers by Weber.

Wheelie bins 660 L / 770 L, lid-in-lid

Wheelie bins / waste containers MGB 660 L / 770 L

by Weber

Spare parts / individual parts / accessories

Lifting handle with lock

www.w-weber.com

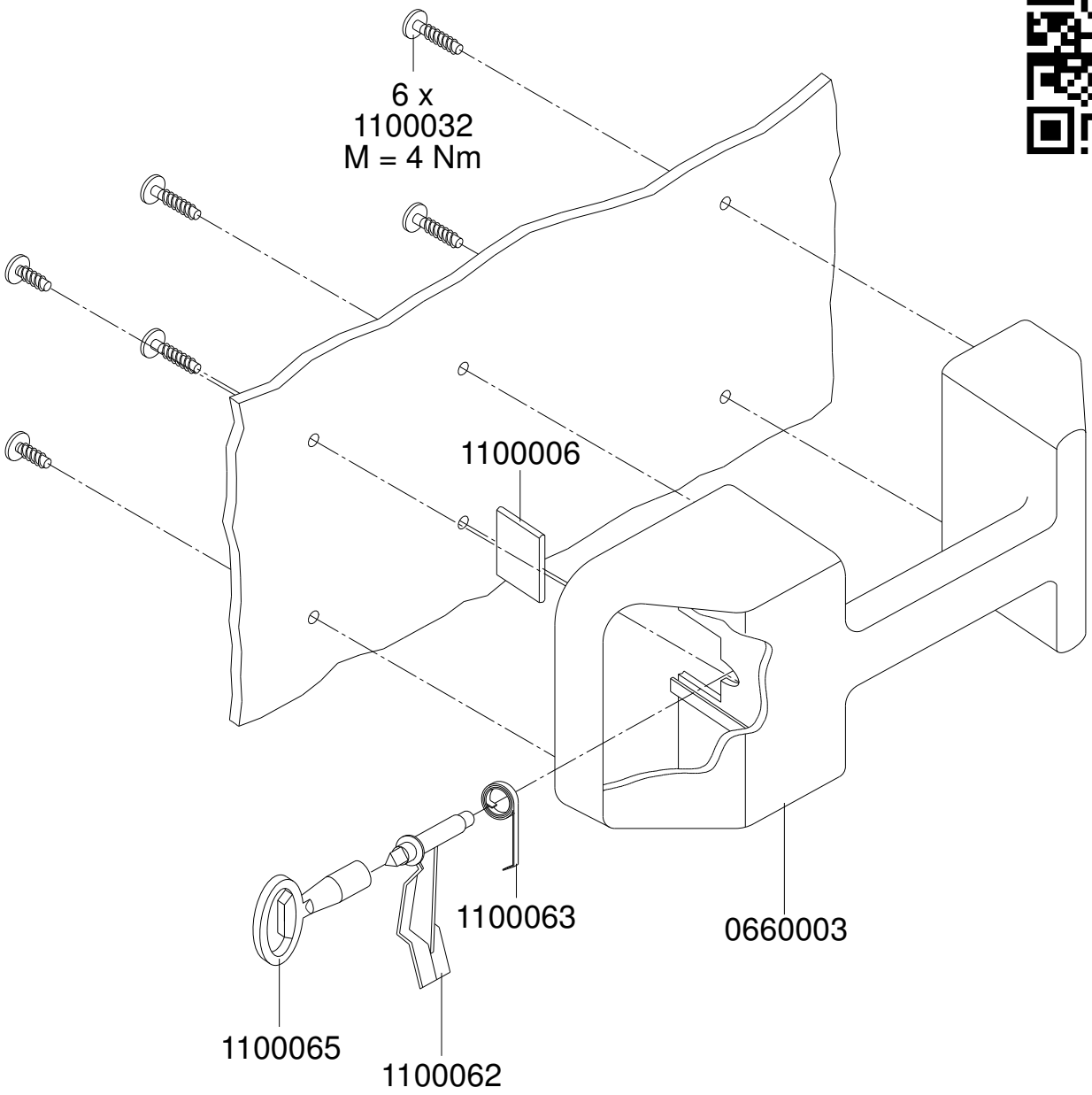

0660003	Lifting handle for lock installation
1100006	Locking plate
1100032	Screw 7x20
1100062	Lock bolt
1100063	Lock spring
1100065	Triangular key

Lifting handle with lock

Spare part / individual part / accessory for MGB 660 L / 770 L wheelie bins / waste containers by Weber.

Wheelie bins 660 L / 770 L, lid-in-lid

Wheelie bins / waste containers MGB 660 L / 770 L

by Weber

Spare parts / individual parts / accessories

Sealing plug

www.w-weber.com

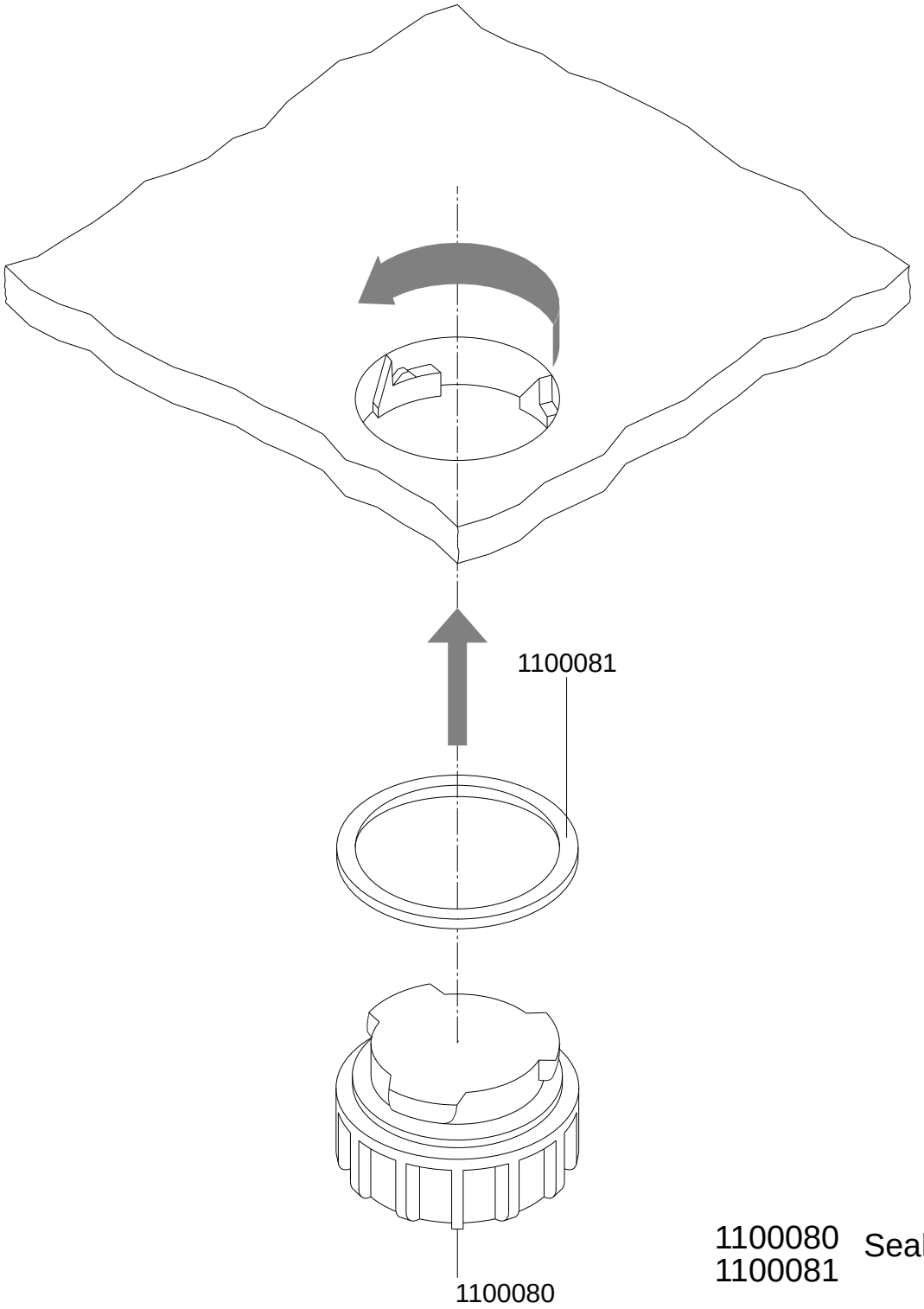

1100080
1100081 Sealing plug

Sealing plug

Spare part / individual part / accessory for MGB 660 L / 770 L wheelie bins / waste containers by Weber.

Wheelie bins 660 L / 770 L, lid-in-lid