Wheelie bin from Manufacturer WEBER

Dimensions of the 770 litre - Sizes and Measures

www.w-weber.com

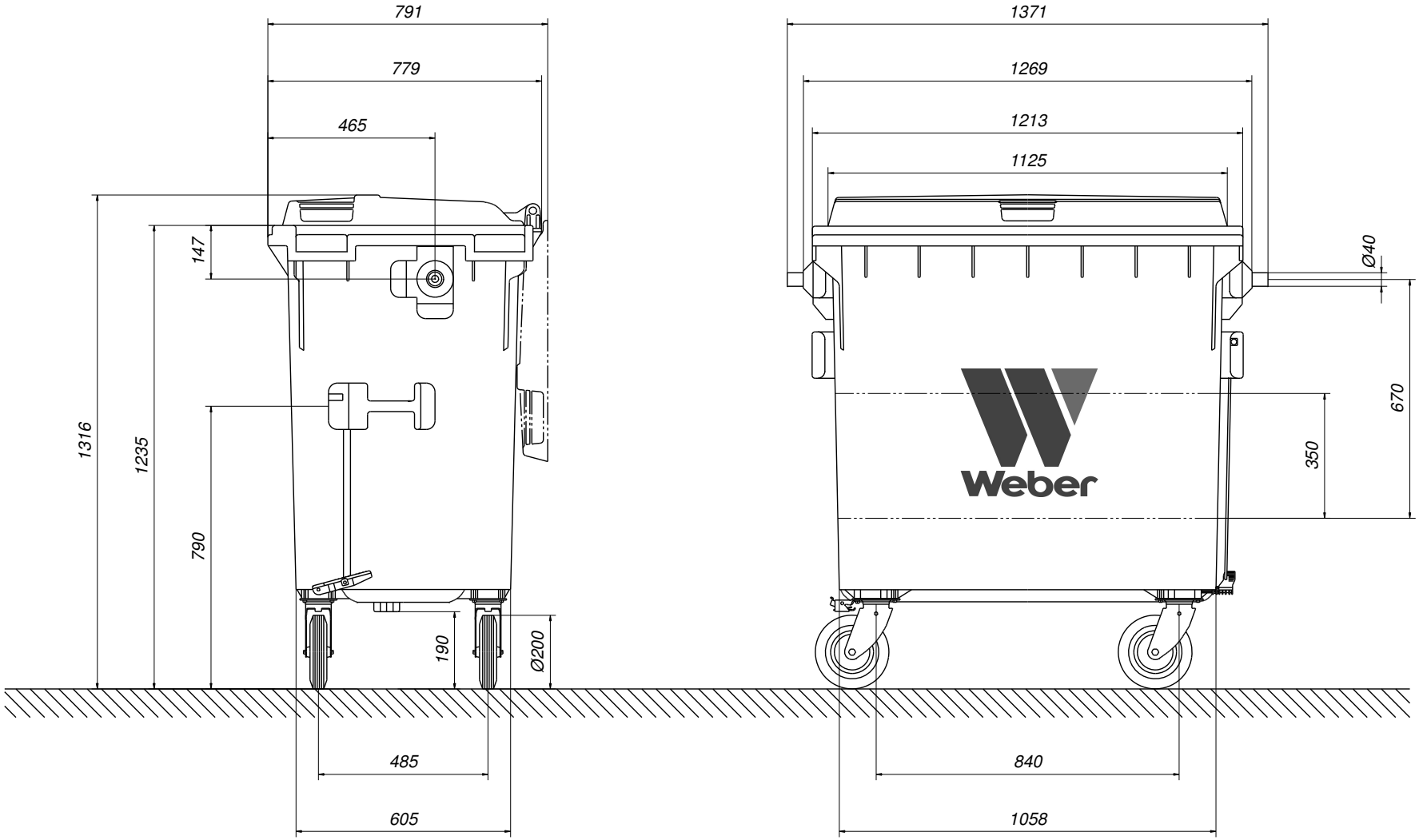

Wheelie bin 770 litre

Sizes and Measures: Height 1316 mm; Width 1371 mm, Depth 779 mm

We reserve the right to make any dimensional and constructional alterations at any time.

Dimensions can vary slightly after manufacture.