Wheelie bin from Manufacturer WEBER

Dimensions of the 660 litre - Sizes and Measures

www.w-weber.com

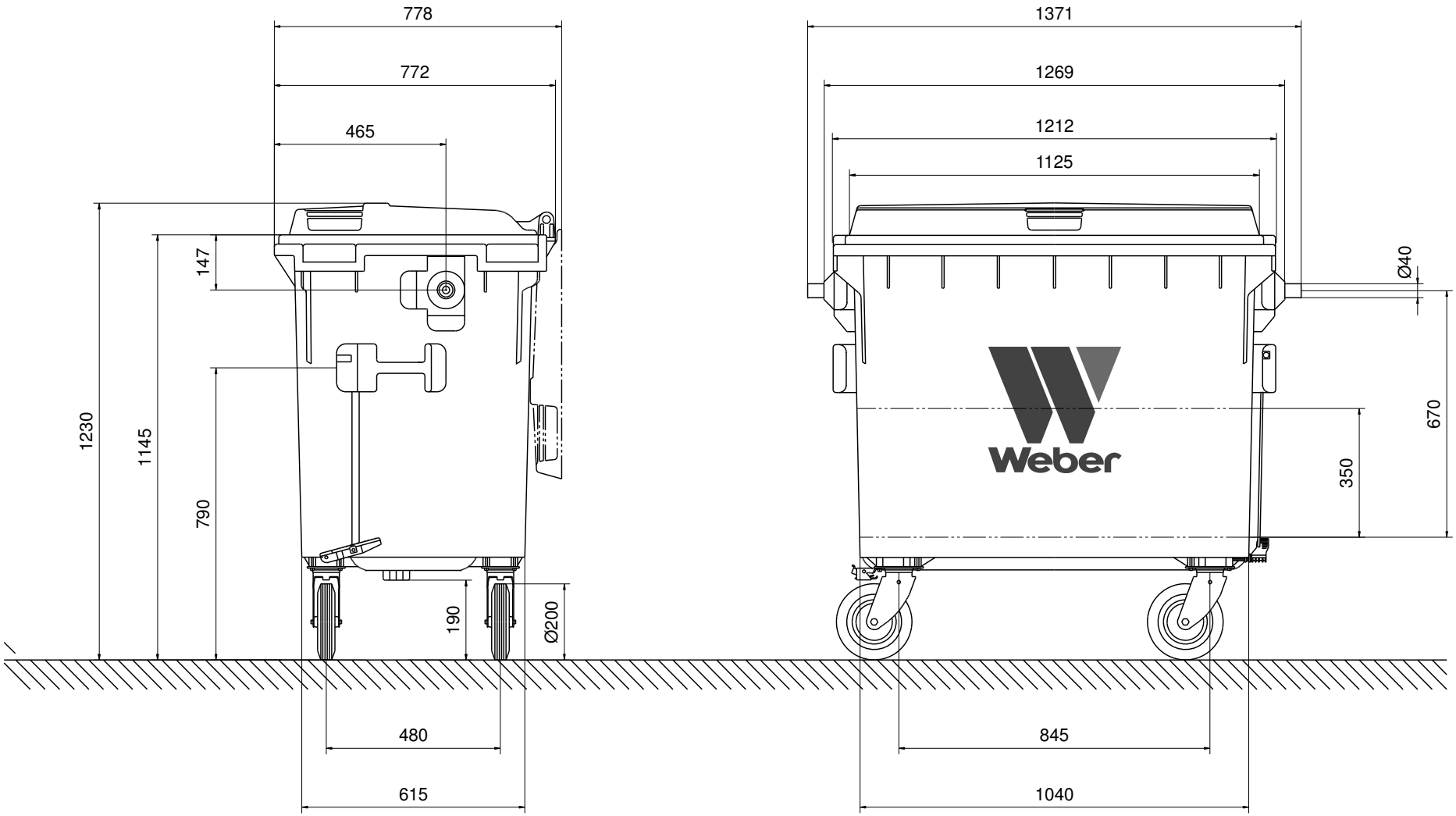

Wheelie bin 660 litre

Sizes and Measures: Height 1230 mm; Width 1371 mm, Depth 772 mm

We reserve the right to make any dimensional and constructional alterations at any time.

Dimensions can vary slightly after manufacture.

www.w-weber.com