Wheelie bin from Manufacturer WEBER

Dimensions of the 50 litre (Litter bin)- Sizes and Measures

www.w-weber.com

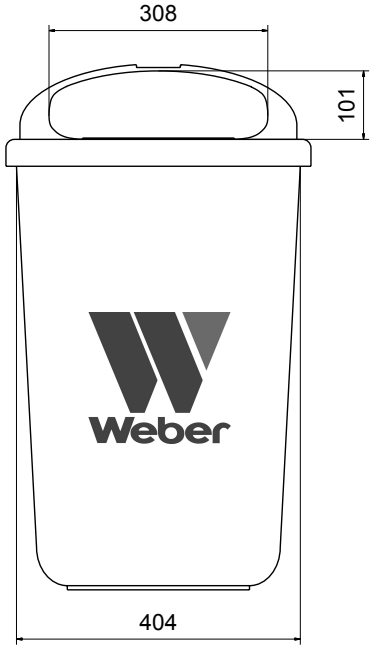

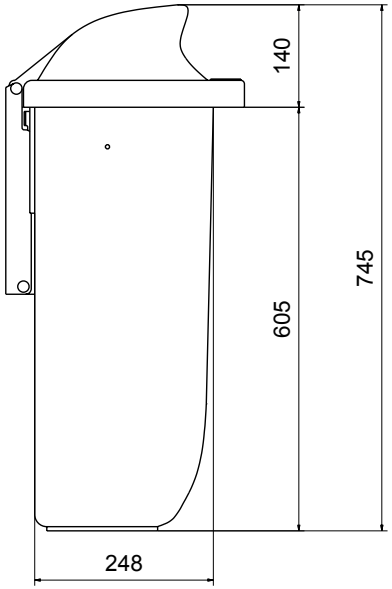

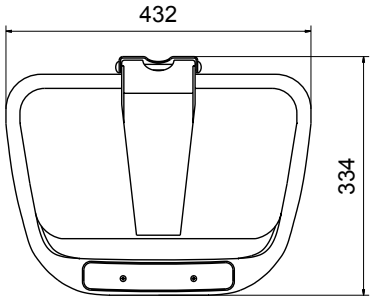

<u>Wheelie bin 50 litre (Litter bin)</u>

Sizes and Measures: Height 745 mm; Width 432 mm, Depth 334 mm

We reserve the right to make any dimensional and constructional alterations at any time.
Dimensions can vary slightly after manufacture.

www.w-weber.com