Wheelie bin from Manufacturer WEBER

Dimensions of the 360 litre - Sizes and Measures

www.w-weber.com

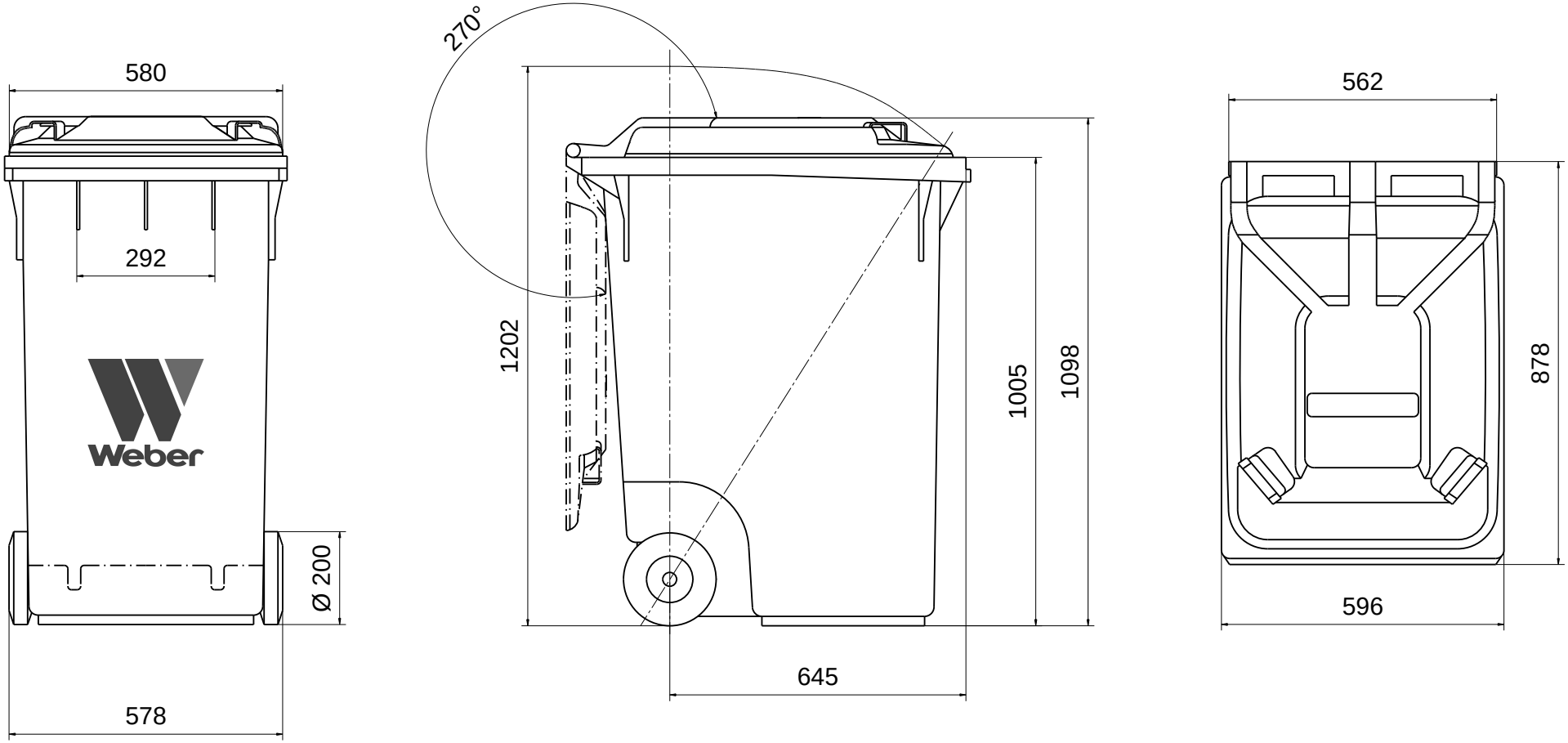

Wheelie bin 360 litre

Sizes and Measures: Height 1098 mm; Width 596 mm, Depth 878 mm

We reserve the right to make any dimensional and constructional alterations at any time.

Dimensions can vary slightly after manufacture.