Wheelie bin from Manufacturer WEBER

Dimensions of the 180 litre - Sizes and Measures

www.w-weber.com

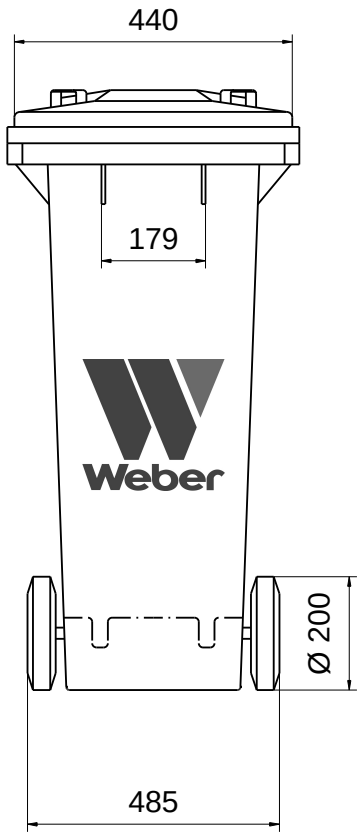

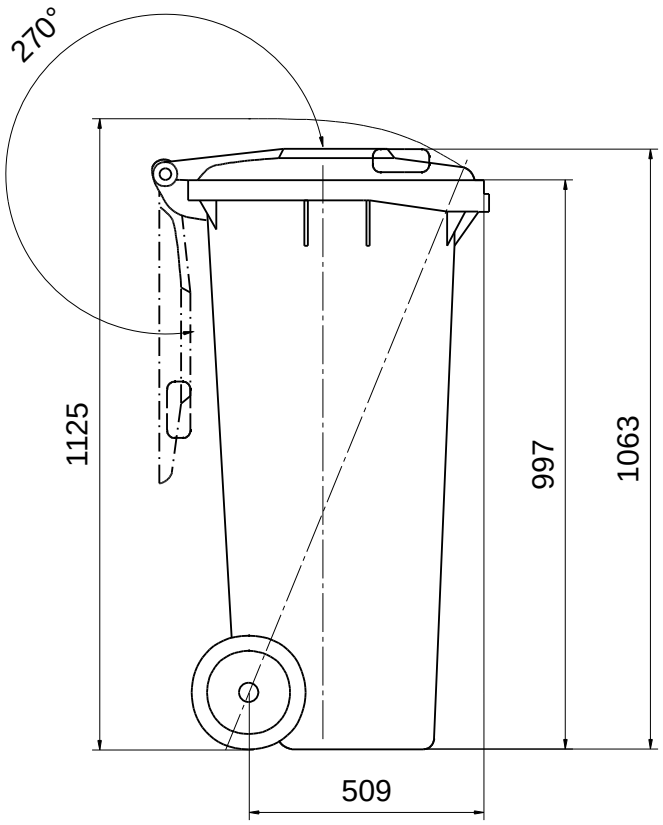

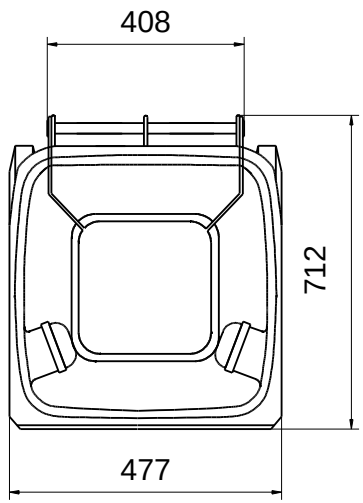

<u>Wheelie bin 180 litre</u>

Sizes and Measures: Height 1063 mm; Width 477 mm, Depth 712 mm

We reserve the right to make any dimensional and constructional alterations at any time.

Dimensions can vary slightly after manufacture.