Wheelie bin from Manufacturer WEBER

Dimensions of the 140 litre - Sizes and Measures

www.w-weber.com

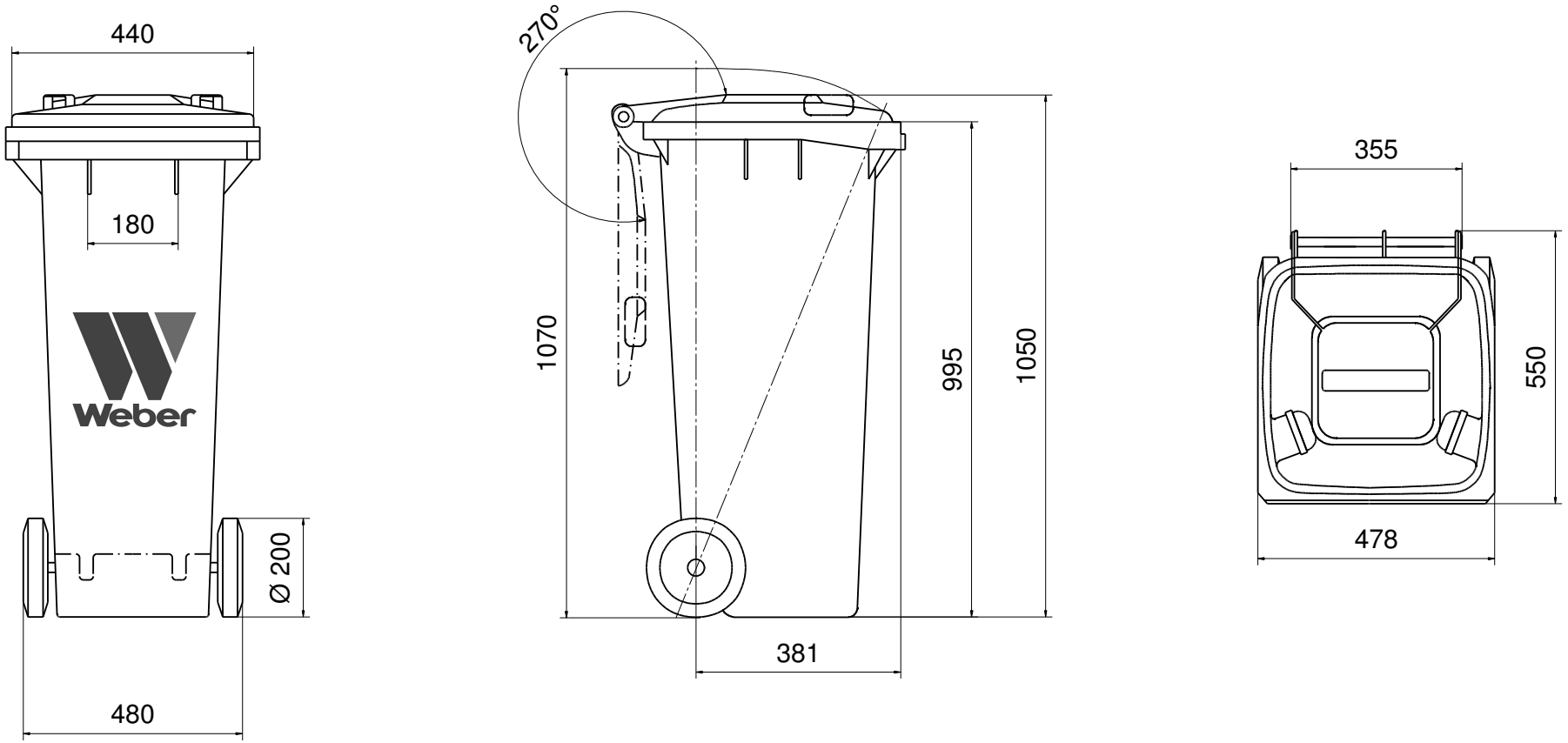

Wheelie bin 140 litre

Sizes and Measures: Height 1050 mm; Width 478 mm, Depth 550 mm
We reserve the right to make any dimensional and constructional alterations at any time.
Dimensions can vary slightly after manufacture.

www.w-weber.com