Wheelie bin from Manufacturer WEBER

Dimensions of the 120 litre - Sizes and Measures

www.w-weber.com

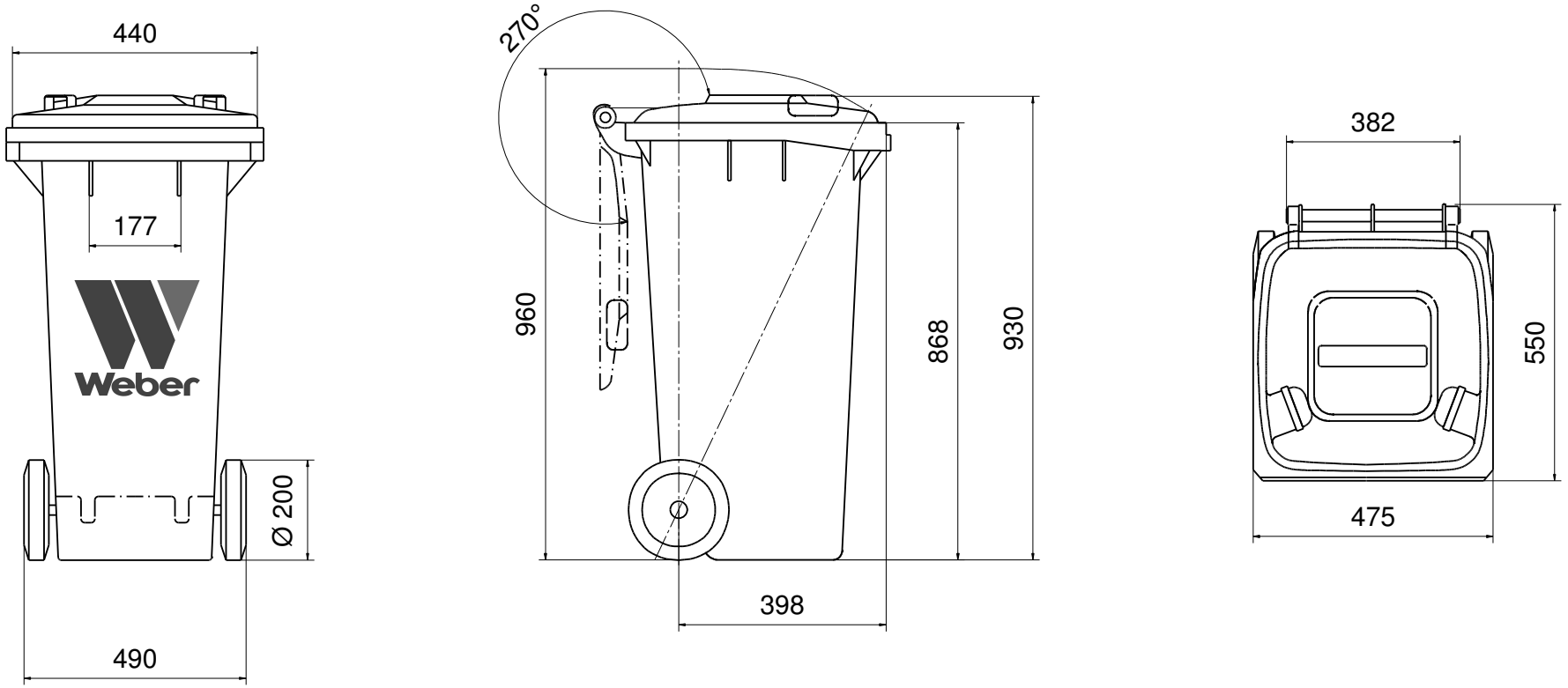

Wheelie bin 120 litre

Sizes and Measures: Height 930 mm; Width 475 mm, Depth 550 mm

We reserve the right to make any dimensional and constructional alterations at any time.

Dimensions can vary slightly after manufacture.