Wheelie bin from Manufacturer WEBER
Dimensions of the 1100 litre Round Lid
Sizes and Measures

www.w-weber.com

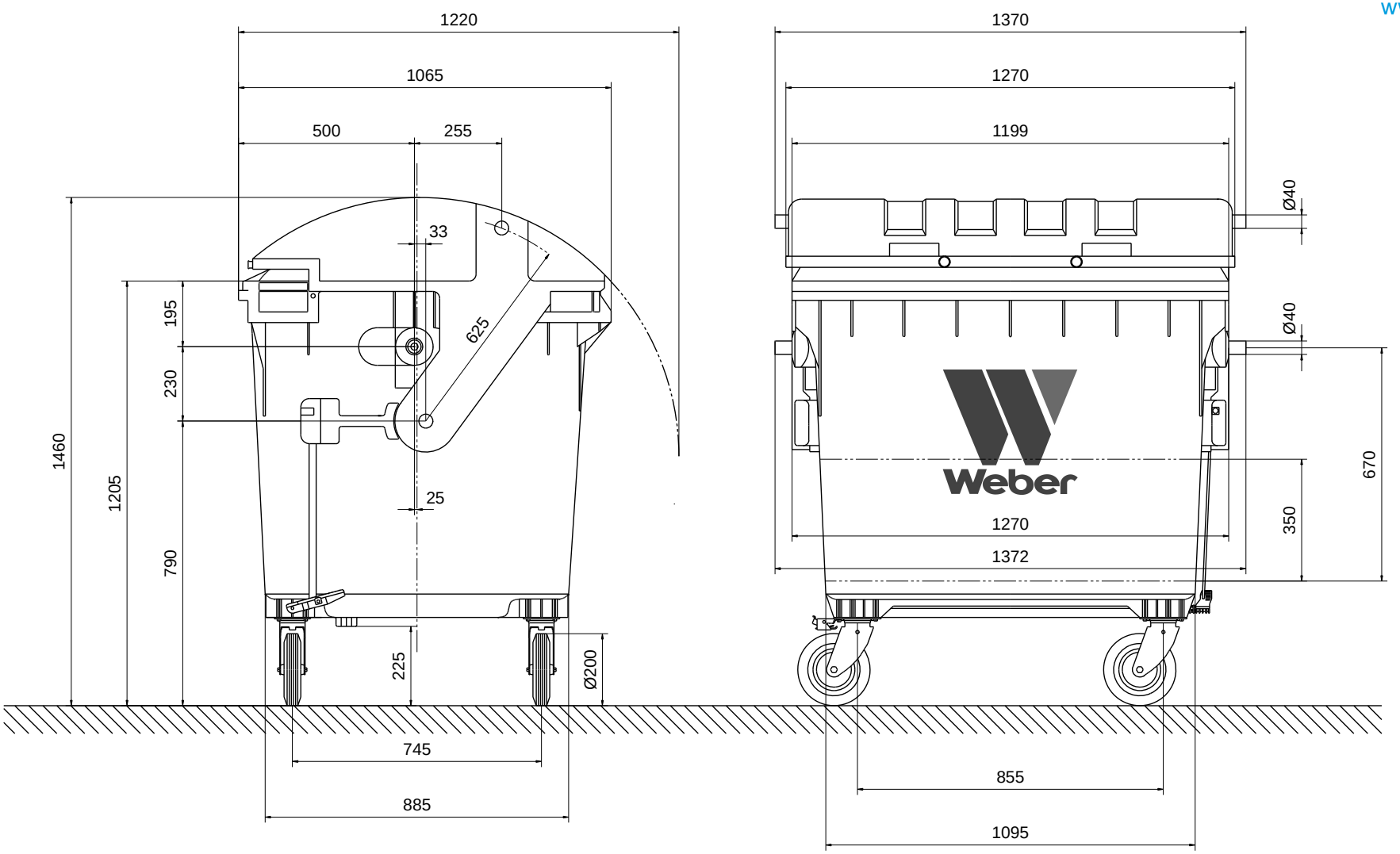

Wheelie bin 1100 litre Round Lid (Dome Lid)

Sizes and Measures: Height 1460 mm; Width 1372 mm, Depth 1065 mm
We reserve the right to make any dimensional and constructional alterations at any time.
Dimensions can vary slightly after manufacture.