Wheelie bin from Manufacturer WEBER

Dimensions of the 1100 litre Flat Lid - Lid in Lid

Sizes and Measures

www.w-weber.com

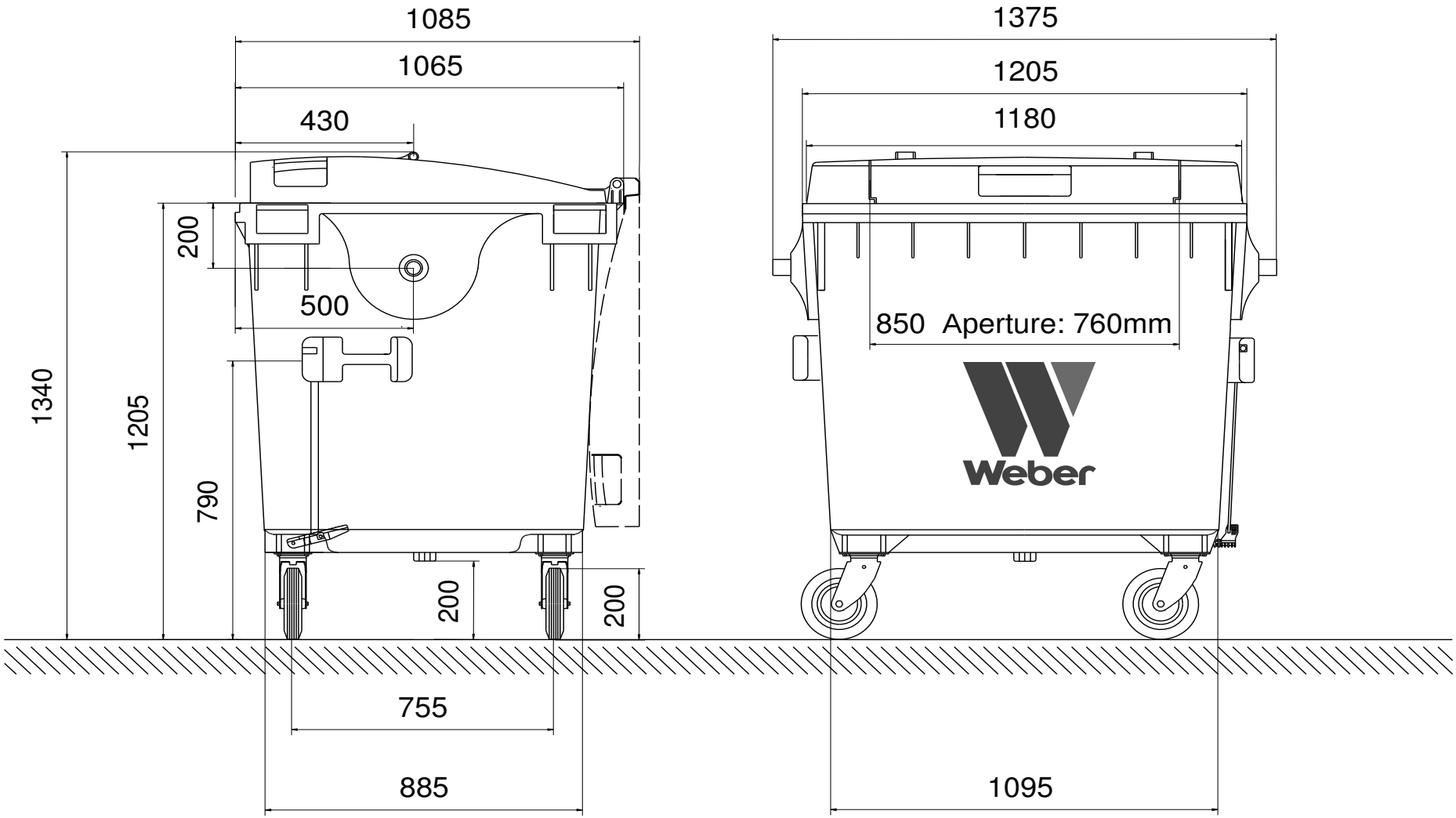

Wheelie bin 1100 litre Flat Lid - Lid in Lid

Sizes and Measures: Height 1340 mm; Width 1375 mm, Depth 1065 mm

We reserve the right to make any dimensional and constructional alterations at any time.

Dimensions can vary slightly after manufacture.

www.w-weber.com