Wheelie bin from Manufacturer WEBER

Dimensions of the 1100 litre Flat Lid CLASSIC

Sizes and Measures

www.w-weber.com

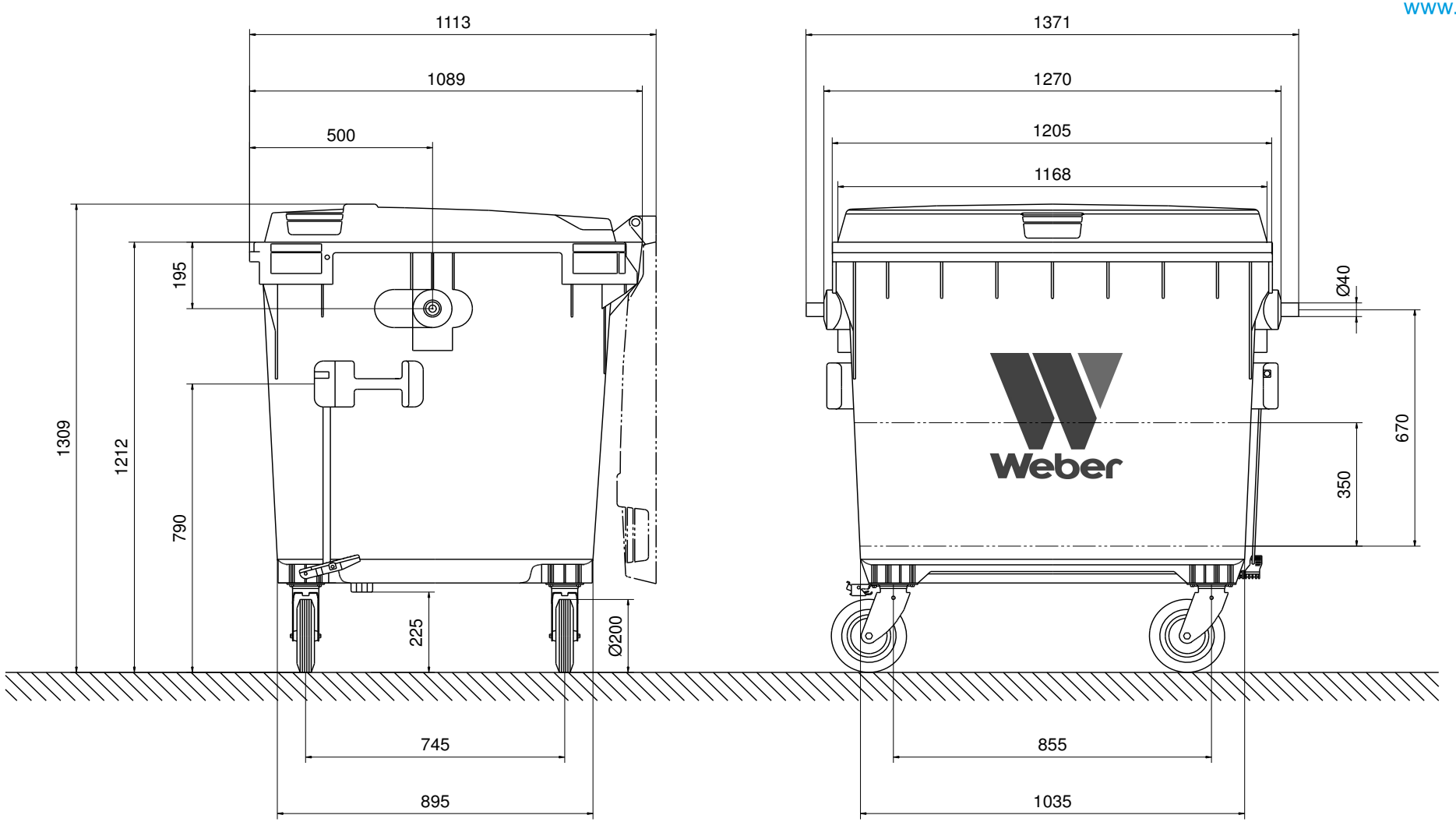

Wheelie bin 1100 litre Flat Lid CLASSIC

Sizes and Measures: Height 1309 mm; Width 1371 mm, Depth 1089 mm

We reserve the right to make any dimensional and constructional alterations at any time.

Dimensions can vary slightly after manufacture.